7th LuK Symposium

11./12. April 2002

Publisher: LuK GmbH & Co.
Industriestrasse 3 • D -77815 Bühl/Baden
Telephon +49 (0) 7223 / 941 - 0 • Fax +49 (0) 7223 / 2 69 50
Internet: www.LuK.de

Editorial: Ralf Stopp, Christa Siefert

Layout: Vera Westermann
Layout support: Heike Pinther

Print: Konkordia GmbH, Bühl
Das Medienunternehmen

Printed in Germany

Foreword

Innovations are shaping our future. Experts predict that there will be more changes in the fields of transmission, electronics and safety of vehicles over the next 15 years than there have been throughout the past 50 years. This drive for innovation is continually providing manufacturers and suppliers with new challenges and is set to significantly alter our world of mobility.

LuK is embracing these challenges. With a wealth of vision and engineering performance, our engineers are once again proving their innovative power.

This volume comprises papers from the 7th LuK Symposium and illustrates our view of technical developments.

We look forward to some interesting discussions with you.

Bühl, in April 2002

Helmut Beier

President
of the LuK Group

Content

1 DMFW – Nothing New? 5

2 Torque Converter Evolution at LuK 15

3 Clutch Release Systems 27

4 Internal Crankshaft Damper (ICD). 41

5 Latest Results in the CVT Development. 51

6 Efficiency-Optimised CVT Clamping System 61

7 500 Nm CVT 75

8 The Crank-CVT 89

9 Demand Based Controllable Pumps. 99

10 Temperature-controlled Lubricating Oil Pumps Save Fuel . . . 113

11 CO2 Compressors 123

12 Components and Assemblies for Transmission Shift Systems 135

13 The XSG Family 145

14 New Opportunities for the Clutch?. 161

15 Electro-Mechanical Actuators. 173

16 Think Systems - Software by LuK. 185

17 The Parallel Shift Gearbox PSG 197

18 Small Starter Generator – Big Impact. 211

19 Code Generation for Manufacturing. 225

Components and Assemblies for Transmission Shift Systems

Reinhart Malik, INA

Introduction

All vehicle transmissions require devices and controls that serve to adjust the transmission to particular driving conditions. This is not dependent on the transmission design. It is merely the design of electrical, hydraulic or mechanical actuation elements that describe the type of shifting. (figure 1).

For manually operated transmissions, shift elements are required, which in turn place demands on stiffness, surface quality, wear behaviour and other characteristics depending on the application.

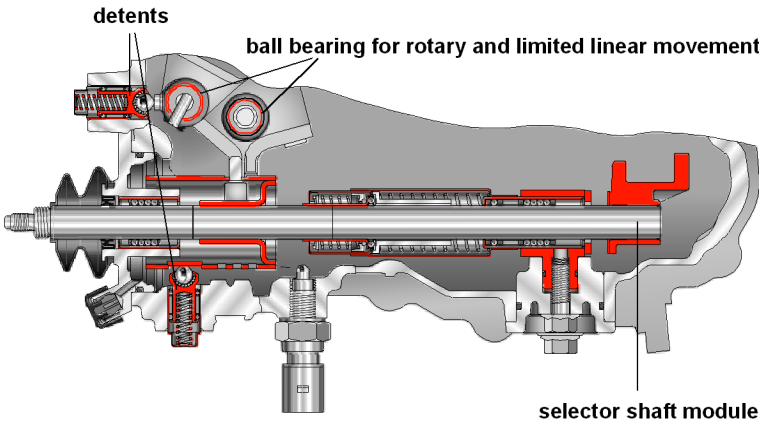

Fig. 1: *Application Example: 6 Speed Transversally Mounted Manual Transmission*

For non-automatic shift systems, there is the additional requirement that the driver must perceive shifting as a smooth and perfect process.

Measures relating to both technology and design allow shift elements to be achieved that meet a wide variety of requirements. Cold formed precision parts and new ideas for assembly designs are among the promising developments in this regard.

Shift Sleeve / Selector Sleeve

To perceive a positive shift feel or shifting comfort, controlling elements must be well matched to each other. This pertains in particular to the selection function.

In this paper the shift sleeve / selector sleeve will be viewed as the central element. It represents the link between the central shift shaft and the shift forks and controls gear changes. This component has a significant impact on functions such as diagonal shifting capability, locking, etc.

By manufacturing components from strip material, functional surfaces have a precise form. Unlike machined parts, there is no unnecessary accumulation of material and the accompanying increase in weight. Customer requirements for reduced transmission mass can thus be met. The shift sleeve / selector sleeve is assembled from several components in order to design functional surfaces in an optimum way and utilise the advantages of the strip material.

The following sections provide a treatment of the relevant components as well as the type of assembly used (figure 2).

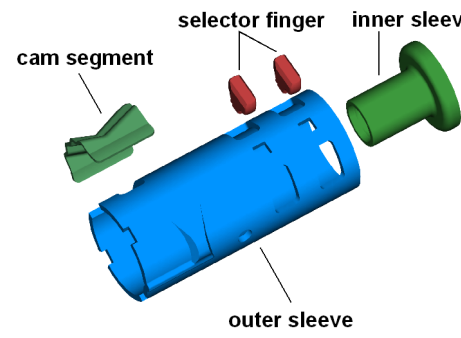

Fig. 2: *Multifunctional Shift Sleeve*

Outer Sleeve

This component represents the outer portion of the multifunctional shift sleeve and has an impact on functions due to profiles and surfaces.

A special process is used to form the sleeve in just one machining operation. Thus, the deviations between the various functional surfaces depend only on the tooling. The tooling used allows a large number of components with close tolerances to be manufactured.

With regard to surface quality, functional surfaces are suitable for the application, and no rework in the form of cutting operations is required. The cold formed ramp contours for the detent pins, which are used to generate shifting force, allow a very smooth surface to be achieved. Machining grooves and similar structures that have a negative effect on shift feel can thus be prevented. (figure 3).

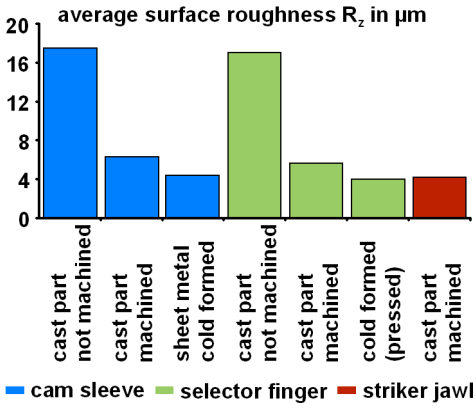

Fig. 3: *Surface Comparison for Selector Contour: Cutting versus Forming*

Inner Sleeve

The outer sleeve is secured on the shift shaft by means of a support referred to in this paper as the 'inner sleeve.' The design of this sleeve is determined by the method used to mount the part on the shaft and the way it is connected to the outer sleeve.

The length and wall thickness for the hub of the inner sleeve's press fit depends on the force/torque to be transmitted. This type of fastening between the inner sleeve and shift shaft has proven to be very advantageous.

Shift Finger

The form of the shift finger is matched to the striker jaws and the requirements for diagonal shifting capability. The functional surfaces must be as smooth as possible so as to enable the shift finger to gently roll off or slide during shifting. For diagonal shifting motion, the chamfers and transitions on the shift finger profiles are especially important. The smooth gliding of the shift finger over the striker jaws is also required. The cold forming operation performed on the strip material allows all of these characteristics to be achieved in one operation.

Mounting Tool

Precision parts are produced using simple and reliable manufacturing methods. The accuracy of the assembly is achieved with the mounting tool.

Accumulated tolerances can be reduced, thus enabling tight tolerances to be maintained.

Heat Treatment

Heat treatment allows the permissible stress values and component hardness to be increased. Increased hardness prevents wear on component functional surfaces. Here, special attention must be given to the shift finger and the ramp profile for the detent pin.

For actuating forces of F > 2000 N, pressures on the shift finger of up to 6000 N/mm² are present (figure 4). The only way to prevent excessive wear and to maintain a low clearance between the shift finger and the meshing with the shift fork is to use the proper heat treatment methods. Shift motion and the diagonal shifting are hardly changed throughout the entire service life.

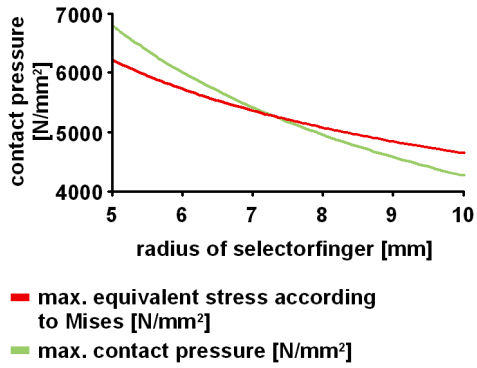

Fig. 4: *Pressure on Shift Finger*

For the ramp profile, the detent overroll over the smallest radius is a decisive factor. For the detent pins currently installed in manual transmissions, spring forces of 140 N can be used. It is absolutely necessary to perform a detailed adjustment of the ramp radii and the pressures found here. If the ramp radius changed as a result of wear, this would bring about changes to the shifting force and thus shift feel during the service life of the transmission (figure 5).

Summary of Advantages

The modular design allows cost-effective parts in various designs to be matched with each other. Component dimensions can be arbitrarily selected and do not depend on the number of slides in the tooling.

Due to the fact that the sleeve is mounted with a press fit, shift shaft design is easy and flexible. The type of fastening does not depend on the mating between the steel and the material. No mechanical machining is required for either part during assembly. No problems are encountered for the precise positioning of several components with the assembly tooling used.

In addition, no limitations are placed on the option of furnishing the shaft with anti-corrosion protection.

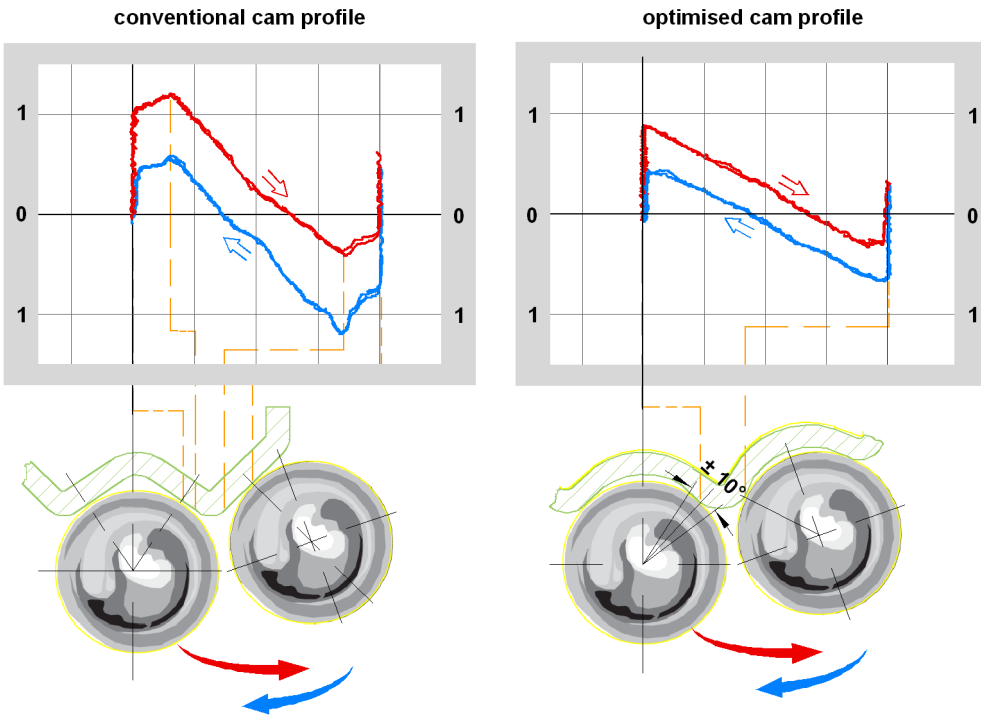

Fig. 5: *Effects of Various Ramp Profiles on Shifting Characteristics.*

Neutral Position

The positioning of the gearshift lever in the vehicle depends on the gearshift lever bracket, the control of the central shift shaft and the positioning of the shift shaft in the transmission. Various systems are used for positioning the central shift shaft.

Motion in the Shifting Direction

For the positioning of the shift shaft in the direction of shifting, one proven method has been to arrange the detent pin in conjunction with the selector profile on the central shift shaft. With the detent pin and the selector profile, shifting force is also effected in the direction of shifting. In the interaction of several other components, it makes a significant contribution to the overall force curve (figure 6).

Significant effects can be achieved for aspects such as engagement force at the end of the shifting process and the return force when disengaging the gear. An arbitrarily selectable, adjustable force curve can be represented.

Motion in the Selection Direction

In the past, pressure springs were used to position the shift shaft in the selection direction.

Depending on the spring rate and forces, this configuration requires a large design envelope in the axial direction. Assembly becomes a problem since several individual parts are required.

One possibility here is to use a detent pin that contacts the shift shaft with a v-shaped profile. Here, both components and the assembly process can be greatly simplified.

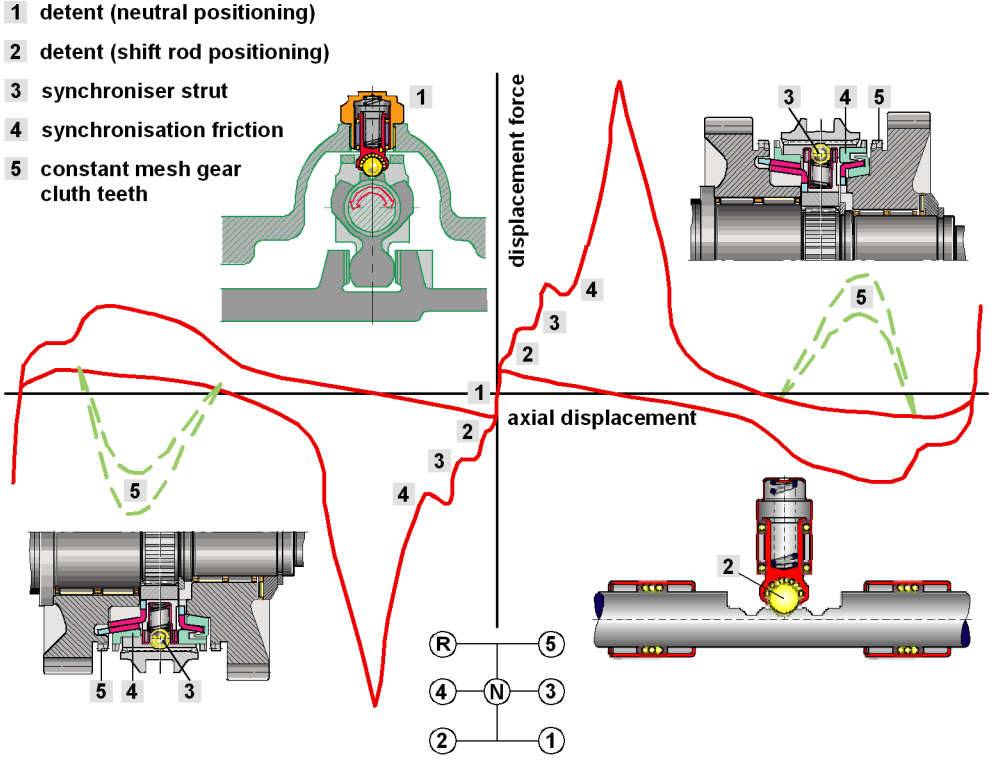

Fig. 6: Influence of Various Components on the Shifting Process

Compared to control by means of pressure springs, the curve can be selected arbitrarily. This advantage is utilised primarily for the new 6-speed transmissions. A decrease at the curve end-positions can be achieved. This has advantages when shifting from fifth to sixth gear. The shift force is not deflected by a high selector force in the 3 / 4 shift gate. This allows erroneous down-shifting from sixth gear to third gear (instead of fifth gear) to be prevented.

At the end of the selection motion, it is possible to brake this motion by means of a gentle increase in force. Depending on the application, a limitation can be achieved by a radius formed in the profile.

An interlocking can be provided by using an additional detent pin.

To reduce costs further, the profiles for shifting and selecting can be brought together. This means that only one detent pin is required to generate shift and selection force. Machining costs for the transmission housing or gearshift cover can be reduced. It is also possible to reduce the number of components, which also has a positive effect on costs. In addition, this combination means that accumulated tolerances are very small.

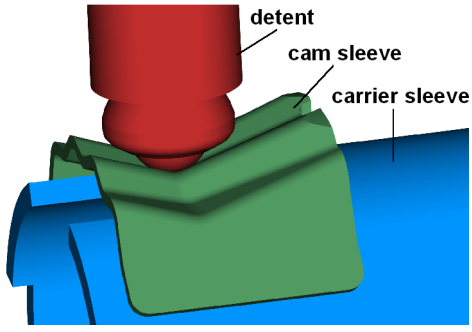

Fig. 7: *Three Dimensional Selector Profile for the Selection and Shifting Processes*

A cold formed sheet metal component is a good choice for the manufacture of this 3-D profile part, (figure 7). Preparing the profile in the tooling allows a high degree of repeat accuracy. These profile sheets are joined with the other components as mentioned above. It is possible to manufacture the part as a precision casting or a sintered component. However, the rework cutting operations required to obtain a good surface quality is hard to achieve.

The following sections provide a description of ways to improve the shifting comfort of an existing gearshift unit (figure 1).

The gearshift unit investigated showed deficiencies due to excessive friction. The lever return motion to neutral 3 / 4 was not sufficient. This problem was also noticeable in the shifting direction.

The following serves to provide details for the investigation and corrective actions for the selection force curve.

The following components were replaced by parts incorporating INA technology:

1. Plain bearing support for the central shift shaft was replaced by rolling bearings with limited longitudinal and rotary motion.
2. Plain bearing support for the selector lever was replaced by needle roller bearings.
3. The boot was replaced by a protective sleeve and with an additional seal in the housing.
4. The locking pawl design was replaced by a drum lock.
5. The spring assembly was replaced by a 3-D ramp profile for the generation of shift and selection forces (figure 8).

Effects

For 1) Hysteresis for the shift and selection force curve is reduced.

For 2) Friction is reduced and in turn the hysteresis for the selection force curve.

For 3) Friction is reduced and in turn the hysteresis for the selection and shift force curves.

For 4) The number of components moved is minimised, allowing the number of contact positions between the shift forks and the central shift shaft to be reduced. The pawl, secured by means of a housing, is eliminated.

Zu 5.) Components are eliminated, and centering in 3 / 4 is improved.

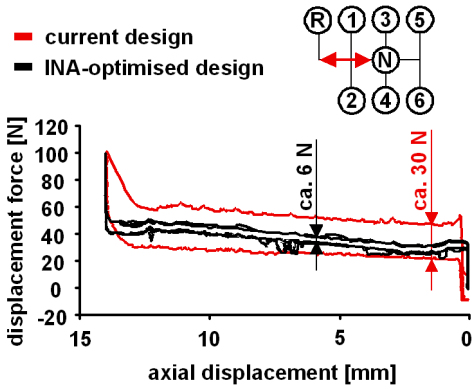

Fig. 8: Comparison of Selection Forces

These improvements allowed hysteresis to be reduced from 30 N to 6 N (see figure 8).

In a subjective evaluation from the customer, this significant reduction was assessed as very positive for the shift feel.

Simulation Techniques in Development

Customer requirements such as small design envelope, maximum savings on weight, low development costs and fast development times can also be achieved for the design of shift systems by using modern CAE tools in the design work. At INA, methods and programs can be used that are optimally matched with the requirements on shift systems (figure 9).

Topology – Optimising the Design of the Shift-Control Housing

The permissible envelope and boundary conditions such as load and force application points are specified. The calculations yield the minimum requirements for the layout of materials under the loads and torques considered. Some results can also viewed as impractical casting. The material-based minimum model must now be designed and/or adjusted to match aspects relevant for manufacturing.

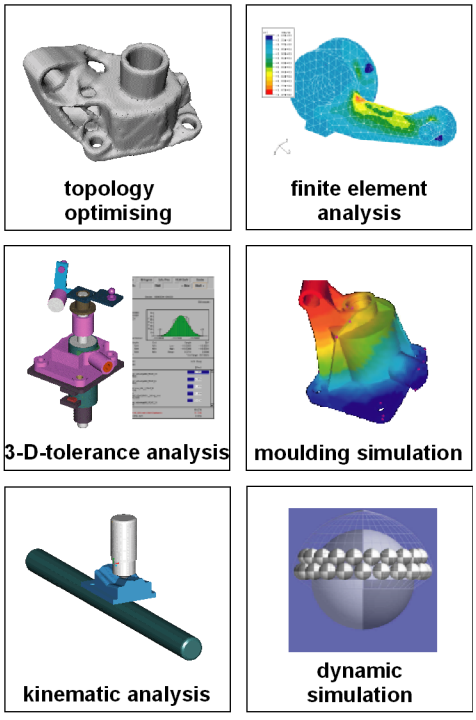

Fig. 9: SAE Methods Used in Transmission Design

Finite Element Analysis

Starting with the 3-D design model, wire frame/nodes and loads are defined. Currently, component deformations and stresses obtained from the supporting program are generally used as the basis for an optimised design.

VSA 3-D Tolerance Analysis

Tolerances for dimensions and geometry will determine how much work will be necessary for manufacturing and assembly. At the same time, they guarantee that complex systems function properly. In contrast to nominal tolerance, the static distribution is considered in VSA-3-D. Another advantage of the simulation is the ability to draw conclusions about process parameters and what causes them. The starting point is the 'nominal' 3-D CAD assembly model with its specified reference points

for the components. The required contact surfaces and points must be defined for the various functions.

Thus, the 'nominal' model is converted to a 'functional' CAD model.

After this, all dimensional and geometric tolerances to be analysed must be assigned to functional surfaces at the component level.

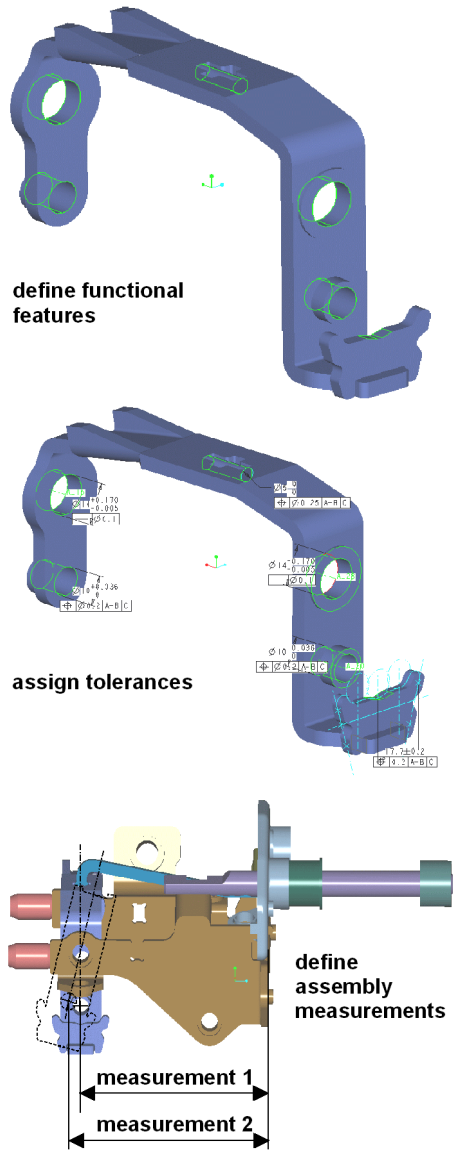

Fig. 10: VSA-3-D Tolerance Analysis

The computer-aided simulation now allows curves to be evaluated, for example for diagonal shift capability from second to third gear.

Not all questions pertaining to the tolerance analysis for a shift system can be solved with only one functional 3-D CAD model (figure 10).

The 3-D tolerance analysis can be used for the following:

- Planning phase: to investigate base dimensions and the assembly sequence for assemblies
- Design phase: to define tolerances and validate assembly specifications
- Prototype manufacturing phase: to check and define measuring facilities
- Manufacturing phase: for the process simulation of manufacturing tolerances

Filling Simulation

Filling simulation is a calculation procedure used to simulate the operations involved in the injection moulding of plastic or light metals.

From the 3-D model, filling calculations allow the designer to recognise the optimum injection, flow behaviour, potential air inclusions or critical seams.

Kinematic Analysis

In the case of irregular selection or shift behaviour for example, the kinematic analysis allows the simulation of displacement forces for a detent pin across the ramp profile. This in turn allows suitable measures to be taken and predictions to be made regarding the behaviour of new surface profiles.

Dynamic Analysis

Dynamic analysis is used to recognise movements that occur in the interaction of interdependent components or assemblies. One example here is the non-guided (chaotic) system as is the case for a detent pin having approximately 60 balls arranged in the shape of a spherical cup (figure 11).

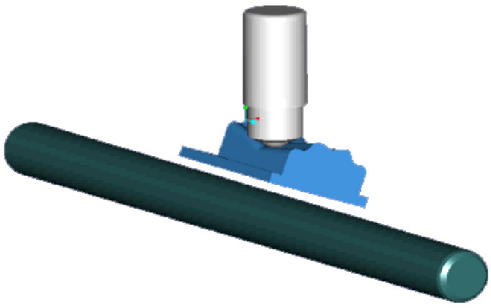

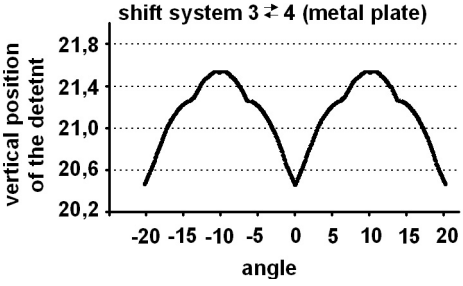

Fig. 11: Dynamic Analysis

Development of Cold Formed Synchronisation Components

Cold formed precision products represent a great improvement over machined synchronisation systems, not only in terms of the optimisation of weight and costs. There are also characteristics resulting from forming technology that allow indirect advantages as well (figure 12).

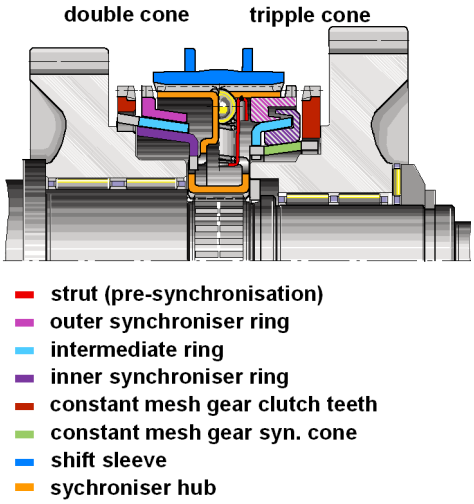

Fig. 12: Multiple-Cone Synchronisation System with Cold Formed Components

Synchroniser Sleeve

Based on the manufacturing methods used for a needle roller and cage assembly, a synchroniser sleeve from steel strip is generated (figure 13). The formed surfaces have more favourable sliding characteristics than products manufactured with cutting operations. Accuracies must be described based on function and not on geometry, comparable to a ring mounted in a housing.

For a ring manufactured using cutting operations, this would be represented by the outside diameter, and for a sleeve, by the press-in force.

Fig. 13: Cold Formed Synchroniser Sleeves

Gear Clutch Washer

Using state-of-the-art manufacturing methods, separate gear clutch washers added to a gear wheel are produced from a prestamped blank. This is followed by a mechanical finishing operation.

The chamfered and driving teeth are stamped using the manufacturing technology available at INA. No rework is required for this operation. Advantages include the smooth surface structure and the low manufacturing costs (figure 14).

Fig. 14: *Cold Formed Gear Cone Body*

Synchroniser Rings

Blanks are drawn from thin-walled strip material. After heat treatment, surfaces are precision ground. This is the basis for a high contact area in the cone body regardless which friction pairings are selected.

Summary

The components discussed in this paper, their functions and potential application are of course not limited to manual transmissions. These components are also used in the new automated shift gearboxes, parallel shift gearboxes and uninterrupted shift gearboxes. The only thing that is different is the type of connection to the actuators. Instead of a connecting central shift shaft via actuating cables or linkage, motion is introduced through tooth segments, gear racks or other elements. The advantages of the cold formed manufacturing methods and the combination of various components can also be utilised. Detent pins, which are mainly used in manual transmissions to achieve a certain degree of shifting comfort, is also required as an interlock with increased spring force.