IDAM
INA Drives & Mechatronics

LDDS

Linear Direct Drive System

LDDS-078-A

SCHAEFFLER
LuK INA FAG

LDDS-078-A
Features, benefits, applications

Features

- Short-stroke axis with compact design
- High power density
- Very low power loss
- Low moving mass
- Motor with small electrical time constant
- Integrated measurement system
- Magnetic counterbalance
- Special design of the moving parts
- Constant lubrication

Benefits

- Small installation space necessary
- Low warming of the axis
- Low heat transfer to the machine
- High axis dynamic, low impulse transfer to the machine
- Fast build up of force in the axis
- Precise, regulated movement and positioning
- Especially high service life of over one hundred million strokes
- Maintenance free

Applications

- Test and sorting machines
- Indexers, e.g. in the electronics industry, or medical engineering
- In the productronics area

LDDS-078-A in Applications
Example

Turret handlers in productronics are typical applications. More than 40000 components and ICs are transported, laser-marked, and electrically and optically checked per hour. Up to 80000 cycles per hour are technically possible. The individual stations are radially arranged around the IDAM indexing table RDDS-20-A. Since each station requires a Z axis, the installation space is very limited.
Very high continuous forces are required here, high accelerations for the oscillating movements and low power loss.

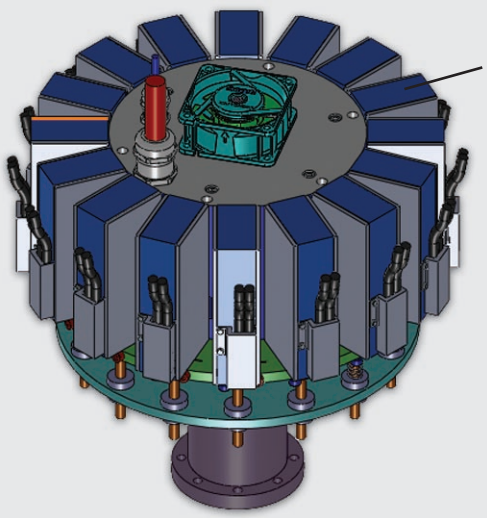

One of 16 LDDS-078-A linear axes

Drawing

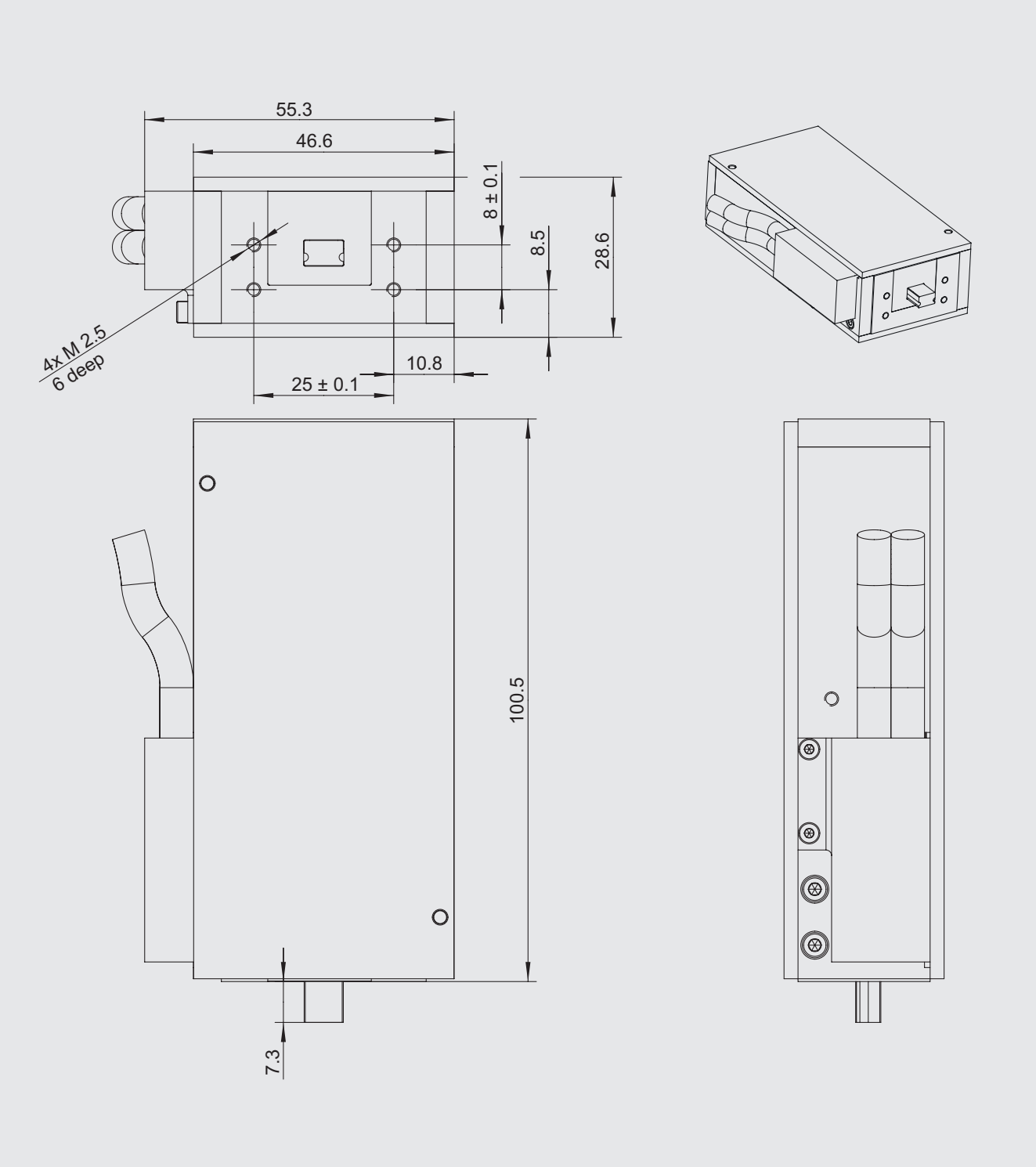

Technical Data

Dimensions, masses, performance data

Dimensions/masses	Symbol	Unit	LDDS-078-A
Dimensions	L x B x W	mm	46.6 x 28.6 x 100.5 (Length with cable outlet: 55.3)
Push rod (retracted position)	L	mm	7.3
Total mass (without connecting cable)	m	g	810
Moving mass (without load)	m	g	75
Fastening variant			Base plate
Cable length	L_{Cable}	m	1
Maximum stroke	s	mm	5

Performance data	Symbol	Unit	LDDS-078-A
Impulse force (1 s) at I_{mp}	F_{mp}	N	65
Peak force (3 s) at I_p	F_p	N	48
Continuous force, not cooled (25 °C)	F_c	N	24
Continuous force, cooled	F_{cw}	N	36
Power loss at F_p (25 °C)	P_{lp}	W	22
Power loss at F_c (25 °C)	P_{lc}	W	5.5
Power loss at F_{cw}	P_{lcw}	W	13
Motor constant (25 °C)	k_m	N/√W	10.3
Maximum speed	v_{max}	m/s	2
Maximum acceleration	a_{max}	m/s^2	300
Friction (monorail guidance system)	F_f	N	‹ 0.8
Weight compensation force	F_{wc}	N	1.5

Technical Data

Electrical data, measuring system

Electrical data	Symbol	Unit	LDDS-078-A
Force constant	k_f	N/A_{rms}	8.1
Back EMF constant	k_u	V/(m/s)	8.1
Electrical resistance, ph to ph (25 °C)	R_{25}	Ω	0.62
Inductance, phase-to-phase	L	mH	0.5
Impulse current (1 s)	I_{mp}	A_{rms}	8
Peak current (3 s)	I_p	A_{rms}	6
Rated current, not cooled	I_c	A_{rms}	3
Rated current, cooled	I_{cw}	A_{rms}	4.5
DC link voltage	U_{DCL}	V	48

Measuring system	Symbol	Unit	LDDS-078-A
Magnetic, incremental			
Resolution		mm	1/1024
Reference mark			1
Repeat accuracy – unidirectional		µm	± 1.5
Repeat accuracy – bidirectional		µm	± 2
Accuracy		µm	± 15
Supply voltage		V	5

INA – Drives & Mechatronics GmbH & Co. KG
Mittelbergstrasse 2
98527 Suhl, Germany

Phone +49 3681 | 7574-0
Fax +49 3681 | 7574-30

E-mail idam@schaeffler.com
Web www.idam.de

Issue: July 2014 I Subject to changes without advance notification, according to technical progress. I Photos: IDAM GmbH & Co. KG